Turbidity sensor

Compact turbidity sensor in flow through version in PVC with both sided DN-bolting or in PP with both sided loose flange

Article-No. 461 6726

Properties

- complete probe with 4 - 20 mA-Output
- 90°-scattered light measurement according to DIN EN ISO 7027
- adjustable measuring range 0-50/100/200/500/1000/2000 FNU
- high resolution from 0,01 FNU
- integrated display
- nano-coated glass, dirt-repellent
- factory calibrated, long-term stable

Applications

- controlling WWT outlet monitoring
- font controlling
- filter controlling
- sedimenation process monitoring
- cooling water monitoring

Technical data	
Measuring principle	90° scattered light according to DIN EN ISO 7027
Measuring range	adjustable: 0 - 50/100/200/500/1000/2000 FNU
Measuring accuracy	+/-5% measured value and +/-1% FS
Measuring resolution	0,01 – 1 FNU depends on Measuring rang
max. pressure	6 bar/20°C, 1 bar/60°C
Material measuring head	PVC oder PP
Environmental emperature	PVC: +5°C to +60°C; PP +5°C to +80°C
Sensor window glass	borosilicate-glass
Supply voltage	24 V DC; (1,2 W)

dimensions see next page

Sycamin GmbH Lorenz-Von-Stein-Ring 1-5 D-24340 Eckernförde Deutschland HRB12206 KI ~ DE626641500
Company offic Boettgerstr.12,20148 Hamburg Tel:+49-40-34999420 Fax:+49-40-3499479 www.sycamin.de
Mail.webmaster@sycamin.de

Dimensions

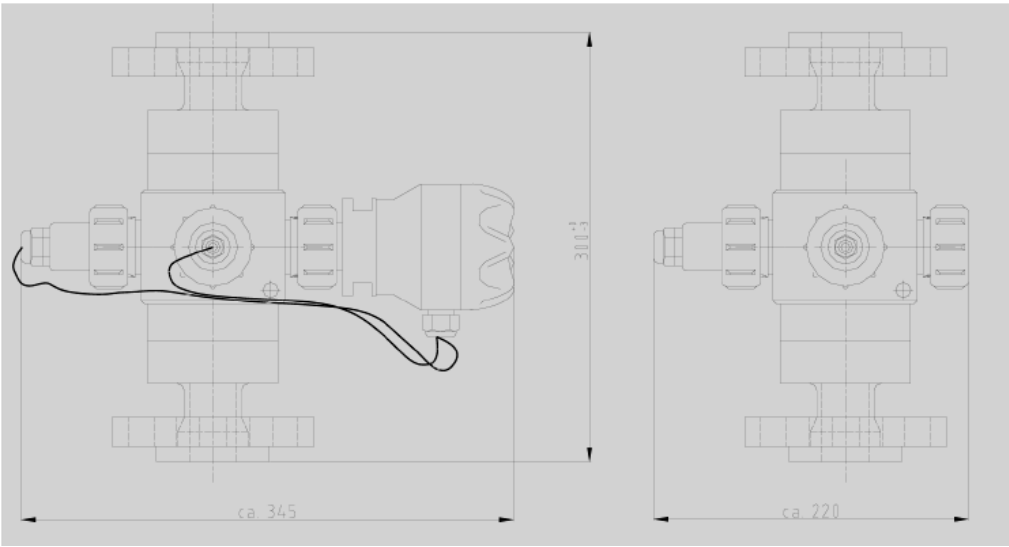

PP-construction with double sided lapped flange

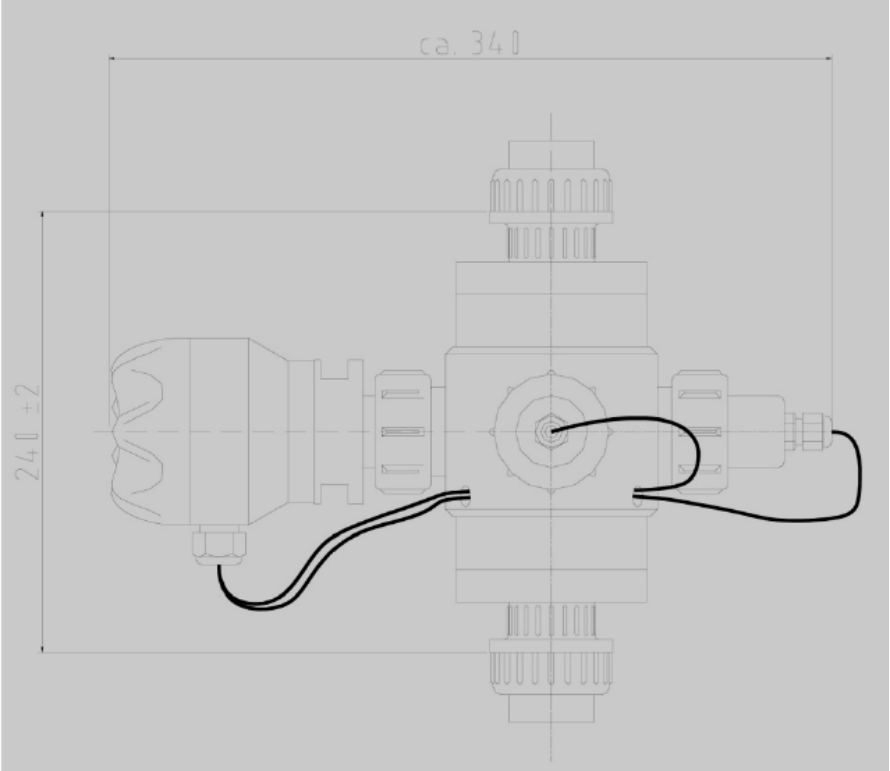

PVC- construction with double sided DN- bolting (DN20...DN100)

Attention:
Mounting only in vertical tube allowed.
Best is to mount in a rising tube with slowdown section
approx.600 mm before and approx. 400 mm behind.

Sycamin GmbH Lorenz-Von-Stein-Ring 1-5 D-24340 Eckernförde Deutschland HRB12206 KI ~ DE626641500
Company offic Boettgerstr.12,20148 Hamburg Tel:+49-40-34999420 Fax:+49-40-3499479 www.sycamin.de
Mail.webmaster@sycamin.de