USL 8200 Ultrasonic sludge interface

Ultrasonic Sludge Interface

Brief description

8200 type sludge interface meter is specially designed for continuous and on-line monitoring of sludge interface position in sewage treatment process. The instrument makes use of reliable detection principle of ultrasonic echo to detect the distance between sensor probe and sludge interface, realizing the control of real-time monitoring of variation in sludge thickness and relevant craft process, therefore optimizing sludge discharge control and medicating control to prevent against effluent deterioration, avoid sludge deaminization and decomposition and optimize process control flow.

Field application

Water plant (sedimentation tank), sewage treatment plant (primary sedimentation tank, secondary sedimentation tank, concentrated tank), coal cleaning plant (sedimentation tank), electric power (mortar sedimentation tank).

System descriptive diagram

SYCAMIN

MEASURING SYSTEM

SPECIFICATION SHEET

Electrical connection diagram

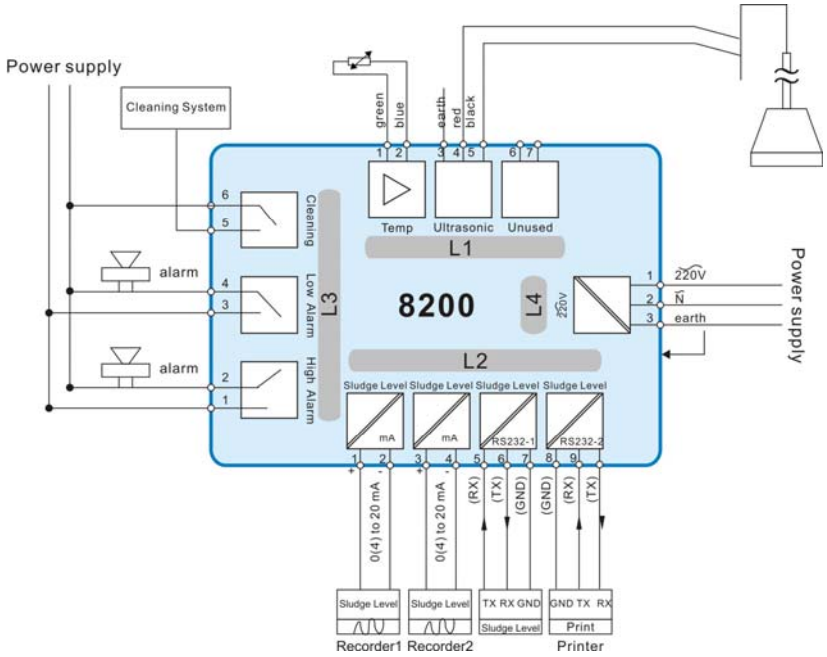

Dimensional drawing of instrument

Unit: inch (mm)

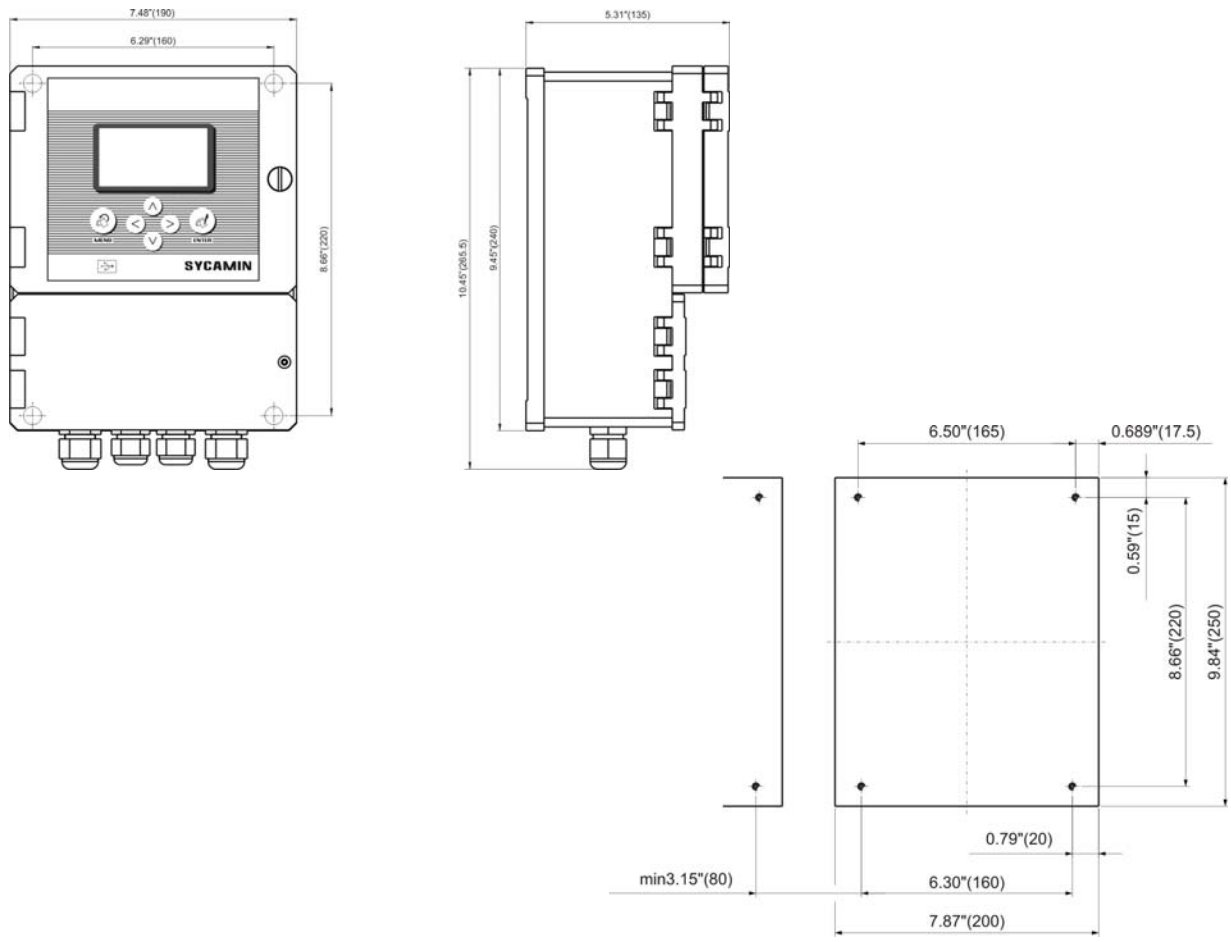

SYCAMIN

MEASURING SYSTEM

SPECIFICATION SHEET

Sensor type

Supply two kinds of selectable probes:

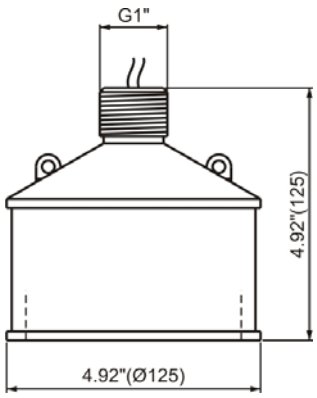

Center frequency	40kHz
Frequency bandwidth	2kHz
Comprehensive sensitivity Min	-35dB
Beam angle	≤6°
Electrostatic capacity (C0)	13nF ±20%
Minimum parallel impedance	120Ω±30%
Working temperature	-20~70℃
Housing material	ABS
Level od protection	IP68

40kHz

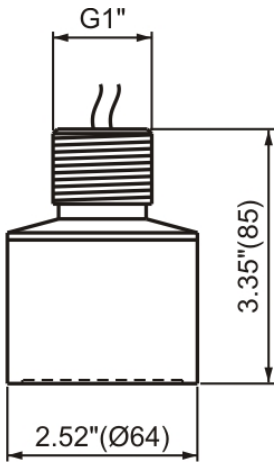

Center frequency	200kHz
Frequency bandwidt	20kHz
Comprehensive sensitivity Min	-55dB
Beam angle	≤5°
Electrostatic capacity (C0)	5nF ±20%
Minimum parallel impedance	180Ω±30%
Working temperature	-20~70℃
Housing material	Stainless steel
Level od protection	IP68

200KHz

System descriptive diagram

System installation drawing

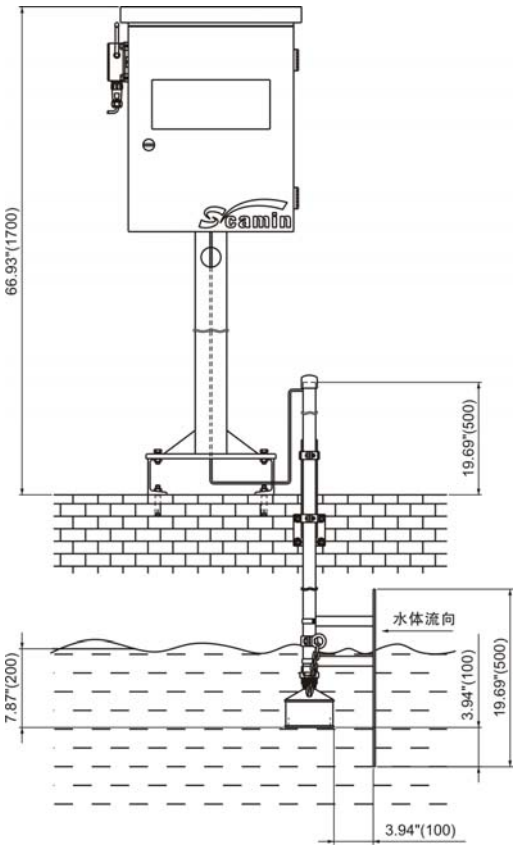

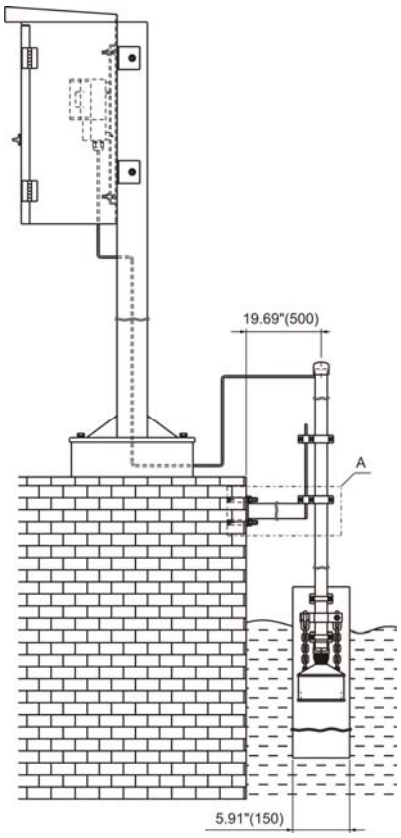

SYCAMIN

MEASURING SYSTEM SPECIFICATION SHEET

Features description

Diversified measurement	Be able to independently conduct measuring sludge level (m), echo signal. Temperature and alarm status can be simultaneously displayed on one display screen. Display screen displays date and time.
Backlighted and oversized LCD reading	There is the backlighted and oversized graphic dot matrix Liquid Crystal Display, the resolution of which is 128×64 pixel and the main character of which displays the height that is 1/2 inch (13 mm).
Multilingual support capability	All the display of the display screen can be selected to be displayed in English or Chinese.
Multifunction	Isolated RS-485, standard MODBUS protocol or factory agreed protocol GPRS wireless data transmission (selectable); Scene print (selectable); USB historical data downloading (selectable);
Menu handbook operation	There are simple keyfield and reasonable menu structure. This analyzer is easy to be used and its menu display screen indicates the function of setting, calibration, operation, testing, maintenance, etc. to you.
Electromagnetic performance	This analyzer reaches to the European criterion of EMI and RFI, conforming with American criterion.
Interactive diagnostic function	Built-in diagnostic function continuously tests the operation of instrument and sensor.
Two paths of analog output 0/4~20mA	The first analog output end is designated as the main measured value (conductivity/salinity); the second analog output end can select the main measured value (conductivity/salinity) or measured temperature value.
Password protection	For safety, please use password protection function to restrict the setting and access of the instrument. Only allow authorized personnel to conduct calibration

System performance

Mechanical parameter

Housing	stoving varnish of aluminium alloy
Level of protection	IP56
Display	122 x 32mm dot matrix LCD liquid crystal
Display	Approx. 1.1 pounds (0. 5kg)
尺寸 **(L×W×D)**	194×189×104mm

Electrical connection

Type	Terminal
Power requirement	220VAC, 50Hz
Power consumption	Max. 10VA

Environmental conditions

When operating	-4~140℉ (-20~60℃); relative humidity 0~95%, no condensing
When depositing	-22~158℉ (-30~70℃); relative humidity 0~95%, no condensing

More info **www.sycamin.com.cn**

System performance

Input

Range of measurement	0~6m, 0~16m
Determination way	30~200KHz Ultrasonic echo technology
Resolution	0.01m
Working frequency	40kHz or 200KHz
Dead zone	40kHz (＜1m) 200kHz (＜50cm)
Temperature compensation	Adopting Pt1000 RTD temperature element can automatically conduct temperature compensation in the range of 32.0~113.0℉ (0.0~45.0℃) so as to adapt to the seasonal change.
Measurement accuracy	1%
Working pressure	0.1MPa
Working temperature	-40~＋70℃
Material quality of transducer	PU/PC/PTFE
Beam angle	≤6º

System performance

Output	
Relay output	Three electromechanical relay; SPST (C type). UL level, 10A/5A @120/250 VAC, 5A @ 28 VDC contactor; be respectively able to set as high alarm output, low alarm output as well as temperature alarm or cleaning output.
Functional model	Control: be able to set as: high/low phase adjustment, fixed point setting, dead zone, open delay and closed delay. Alarm: be able to set as: low post alarm point, dead zone of low post alarm point, high post alarm point, dead zone of high post alarm point, open delay and closed delay. Status: be able to set as: normally open or closed, when error happens, automatically recover setting before leaving factory
Control function	Relay or electric current output can be programmable as one or two pulse pump or magnetic valve or electrically driven pump Each relay all can be designated through setting parameter to conduct drive
Electric current output	Two groups of independent analogue output (#1 and #2), each group can be set as 0~20mA or 4~20mA Resolution: 0.004mA (12 digits) Maximum drive load: 550Ω Site analog signal output function
Communication way	Isolated RS-485: Modbus or Profibus DP protocol or factory agreed protocol Be able to use IBM compatible personal computer and realize that determinator determines data communication RS-232: Be able to use serial port miniature printer Print historical data (selectable) USB historical data downloading (selectable);
Storage backup	All the user settings are saved in EEPROM, and data will not be lost after outage. Store 20000 points of data Be able to externally connect USB to download historical records
Measured performance	Accuracy: 0.5% of the full range Stability: each 24h is 0.05% of the full range (non-accumulation) Repeatability: 0.1% of the full range Temperature drift: zero and full range: less than 0.03% of the full range of per ℃