UL50 Liquid Level Meter (ultrasonic)

Ultrasonic level meter(Integrate)

（50.12.0806）

Brief description

The working principle of ultrasonic level meter is that high frequency ultrasonic pulse emitted by transducer (probe) enconuters the surface of the measured medium, then it is reflected back. Partial reflection echo is received by the identical transducer, being converted into electrical signal. Ultrasonic pulse is transmited by acoustic velocity, from launching to receiving ultrasonic pulse, interval of required time is directly proportional to the distance from the transducer to the measured medium. The relation of distance value S with acoustic velocity C and transmission time T can be expressed by the formula: S=CxT/2.

Application fields

Water level measurement and etc., meanwhile be able to be used as level meter by software setting

System description diagram

OEM type of machine

Serial number: 50.12.0806-1

Serial number: 50.12.0806

System description diagram

Diagrammatic sketch of installation

Unit: inch (mm)

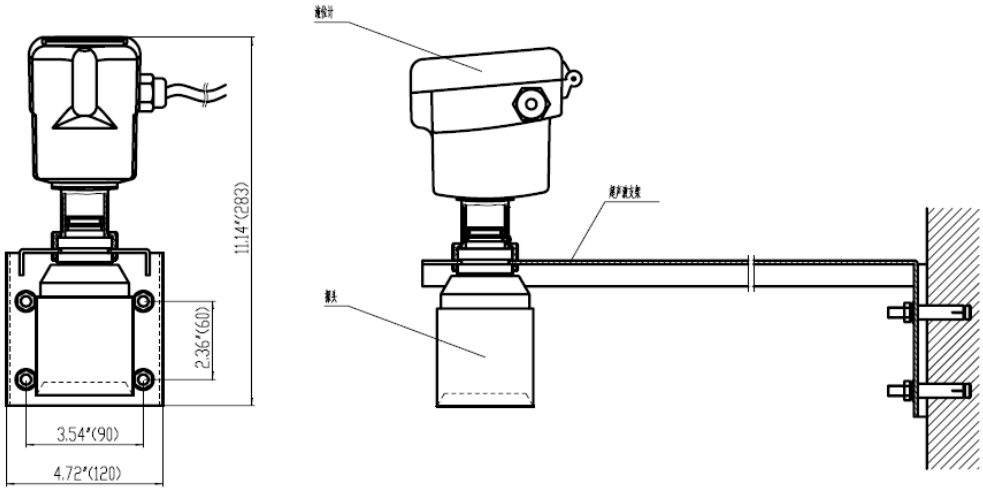

Serial number: 50.12.0806-1

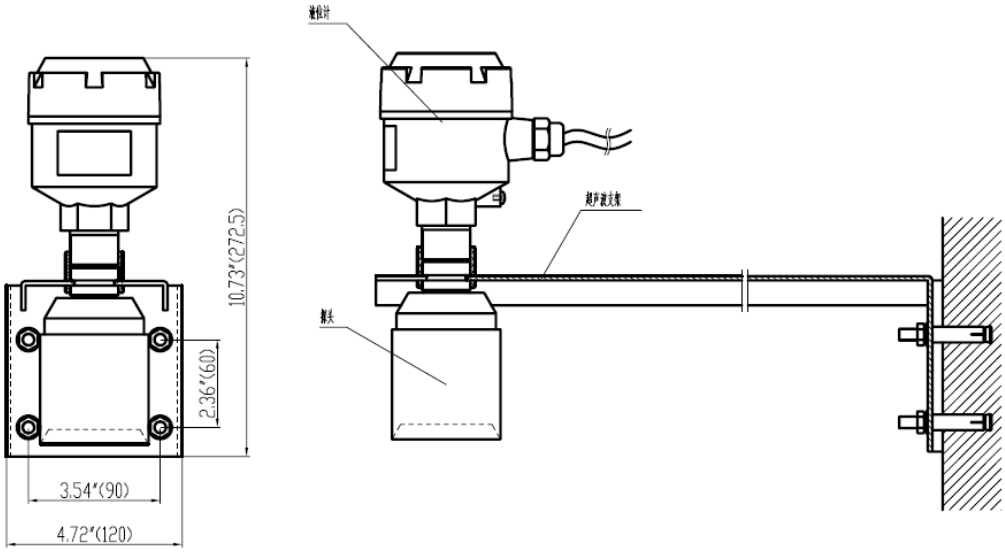

Serial number: 50.12.0806

Notes

Ultrasonic sensor must be correctly placed in the applied field

When installing instrument, something also needs to be noted: the maximum material level is not alllowed to enter into measuring dead zone; the instrument away from tank wall must keep certain distance; the installation of instrument makes the transmitting directing of transducer be vertical with the liquid level as far as possible.

Ultrasonic wave sensor can be directly installed in the place above the point of water level observation, the sounding side of which should aim at water level, and which must be assured to be perpendicular to the water level by the spirit level and any other tools. The distance that sensor is apart from the possible highest liquid level is larger than dead zone, besides, due to the factor of sensor's launch angle, there needs to keep enough distance between the sensor and pool wall or other surrounding shelters (see list as follows). When installing sensor, there can't be other reflecting surfaces on the path of ultrasonic propagation.

When the transducer emits ultrasonic pulse, there must be certain launching opening angle. Among the inferior margin of transducer to the surface of measured medium, inside the area radiated by the emissive ultrasonic wave beam, there must be stumbling block, consequently, when installing, keep off the facilities inside of the tank as much as possible, such as human ladder, limit switch, heating equipment, holder and etc. Additionally, it is necessary to pay attention to that ultrasonic wave beam is forbidden to intersect with charging material flow.

the relation between measuring distance of sensor and holde
(under the ideal circumstance)

Measuring distance **L**	Diffusion radius **r** （r=L*tan6°）	The length of installing holder **D** = r + probe radius （3.0cm）
1 m	10.51 cm	13.51 cm
2 m	21.02 cm	24.02 cm
3 m	31.53 cm	34.53 cm
4 m	42.04 cm	45.04 cm
5 m	52.55 cm	55.55 cm
6 m	63.06 cm	66.06 cm
7 m	73.57 cm	76.57 cm
8 m	84.08 cm	87.08 cm
9 m	94.59 cm	97.59 cm
10 m	105.1 cm	108.1 cm
11 m	115.61 cm	118.61 cm
12 m	126.12 cm	129.12 cm
13 m	136.63 cm	139.63 cm
14 m	147.14 cm	150.14 cm
15 m	157.65 cm	160.65 cm

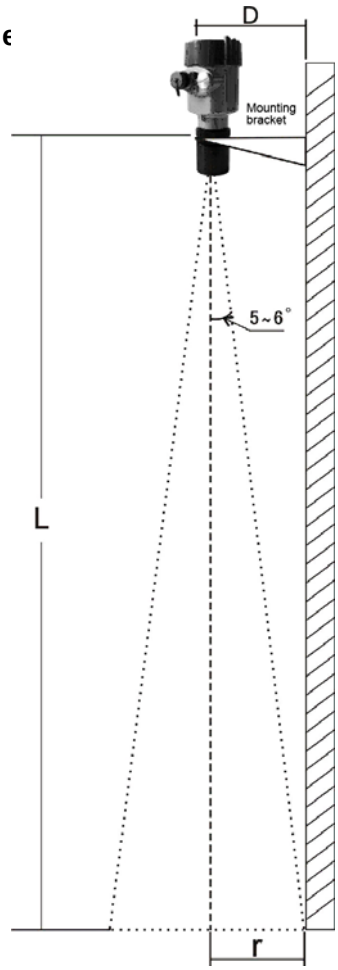

Notes

The incident angle of sonic wave must be kept right-angle with the level surface

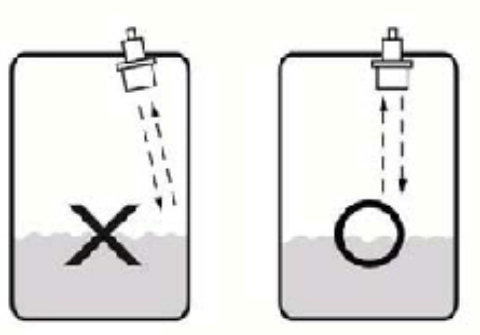

Sensor installation cannot be too close to the interior wall so as not to cause measurement error

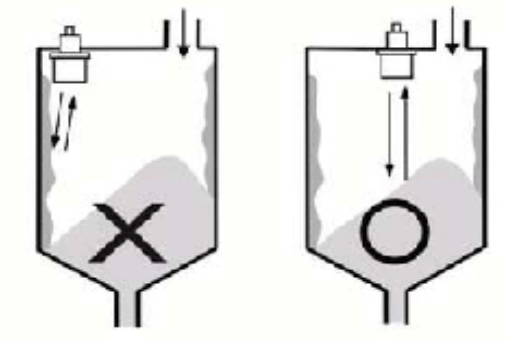

When installing, don't approach the tank wall in case of the holder inside of the tank wall
The sonic wave with reflection false

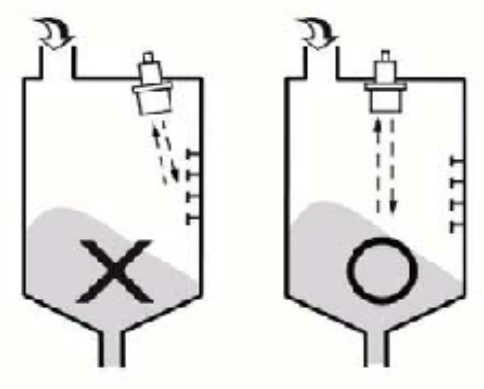

if there is stirrer in bucket and slot, intense vortex and foam will be generated. wave pipe must be added to set up in the bucket and slot and establish gas vent on the upper end of the pipe to ensure the correct -ness of measured value.

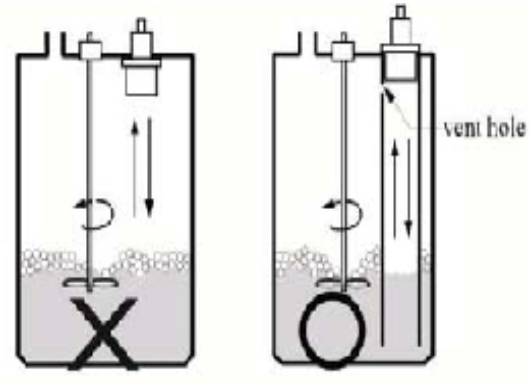

When installing, keep off installing at the position of material inlet so as not to suffer the interference of material and stumbling block.

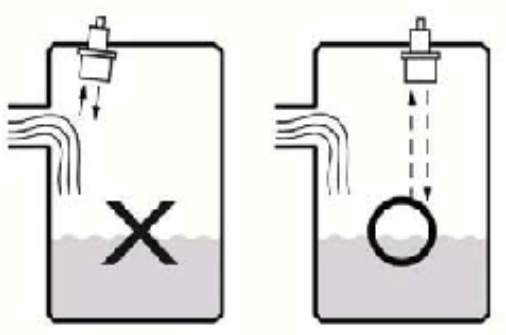

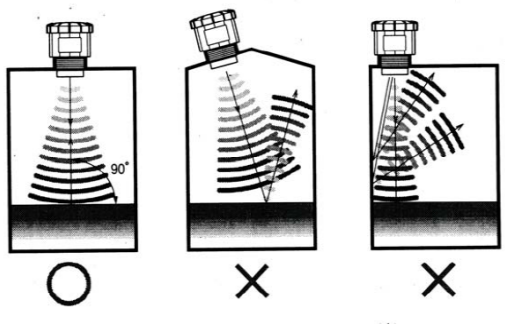

Characteristic description

Adopting advanced microprocessor and unique Echo Discovery echo processing technic, ultrasonic level meter can be used in various kinds of complex working condition, built-in temperature sensor of transducer can realize temperature compensation of measuring value. Ultrasonic transducer adopts the optimum acoustics matching technique, which can make transmitting power of ultrasonic transducer more effectively radiate out to enhance signal intensity, thus realizing the accurate measurement.

Technical index

Working frequency	40KHz	40KHz	30KHz	30KHz
Range of measurement	0~5m	0~8m	0~10m	0~16m
Serial number of ordering	UK4030	UK4080	UK3010	UK3016
Resolution ratio	0.01 m			
Dead zone	40~45 cm	45~50cm	55~60cm	75~80cm
Launching angle	Half-angle 5~6^0			
Temperature compensation	Select Pt1000 RTD temperature element can conduct temperature compensation in the range of 32.0~113.0℉ (0.0~45.0℃), or user manually inputs one temperature set by himself to conduct compensation			
Echo Discovery Display screen	122×32 LCD dot-matrix display screen			
Current output	Isolated DC 0/4~20mA output, corresponding liquid level range can be set, the maximum load is 550Ω			
Power requirement	DC16~24V			
Power dissipation	2W			
Ambient temperature	0~60℃			
Relative humidity	≤90%			
Installing form	Rack mounting			
Weight	Approx. 1kg (excluding holder)			

Servicing and maintenance

Inspect sensor cable

If there is measuring issue shown and user doubts that this issue is on the sensor cable, so examining whether there is damaged in appearance or not. If using mutual cable jumper, you should disconnect both ends of the cable (sensor and controller), and use ohmmeter to detect whether its circuit is interlinked or interior short circuit or not.

Keep sensor clean

To keep accuracy of measurement, clean sensor periodically, wipe off the sundries, such as cobweb and etc. and keep dry for the sounding side of sensor.

Keep controller calibrating

Power supply of instrument should be separate with the equipment that may generates electromagnetic interference, such as the motor and etc.. When installing, cut off redundant cable to ensure appropriate length, thus keep off unnecessary induction signal ("electrical noise" may disturb sensor signal).

Servicing and maintenance

When measurement is inaccurate, use soft brush to clean the end surface of sensor so as to remove the attachment on it.

If maintenance work does put into force, but there is still problems for measuring result, the possible reasons are as follows:

Fault cause	Solutions
No display on display screen	Confirm connection, check whether there is power supply or not and the input voltage is normal or not.
Display screen data display, no regular jump or motionless, but others are normal	If sensor's wiring is totally right or not, loosed or not. if sensor installation meets the requirement or not, whether there is sheltered or not. Examine temperature sensor input is normal or not, if sensor is damaged or not.
Measuring data drifting	After confirming that wiring and demarcating are totally right, change corresponding sensor or informing manufacturer.