UF53 Open Channel Flowmeter

Open Channel Flowmeter

Brief description

Making use of ultrasonic, measure liquid level of the fluid that flows through open channel, and then by the known liquid level-flow relation to figure out the flow value; in some occasions, if cannot confirm the relation of liquid level-flow, but being able to confirm the relation of liquid level-section of the open channel, then being available to match with flow sensor to measure out flow velocity and by the “flow=sectional area x flow velocity” to work out flow value. There are two paths of electric current, three paths of relays and one path of RS232 serial port (purchase on selection) for output of the instrument.

By need, user can set output form of the electric current output and relay.

The two linearization system of flowmeter is up to how to measure the sample water.

- On kind is to select in assured watter slot and weir in advance, such as water slot of Parshall and triangle weir.
- if water slot or weir is not standard form, be able to apply the formula of “flow=sectional areaxflow velocity”.

Ultrasonic open channel flowmeter adopts standard weir to serve as auxiliary measuring means, mainly including: full width weir, rectangle weir, triangle weir, Parshall slot and P - B slot, the noramlly used is Parshall slot.

Application fields

Riverway, irrigation channel, factory, municipal sewage discharge with free effluent drainage condition and measurement with other partially filled pipes

System description diagram

System description diagram

Dimension figure of the instrument

Unit: inch (mm)

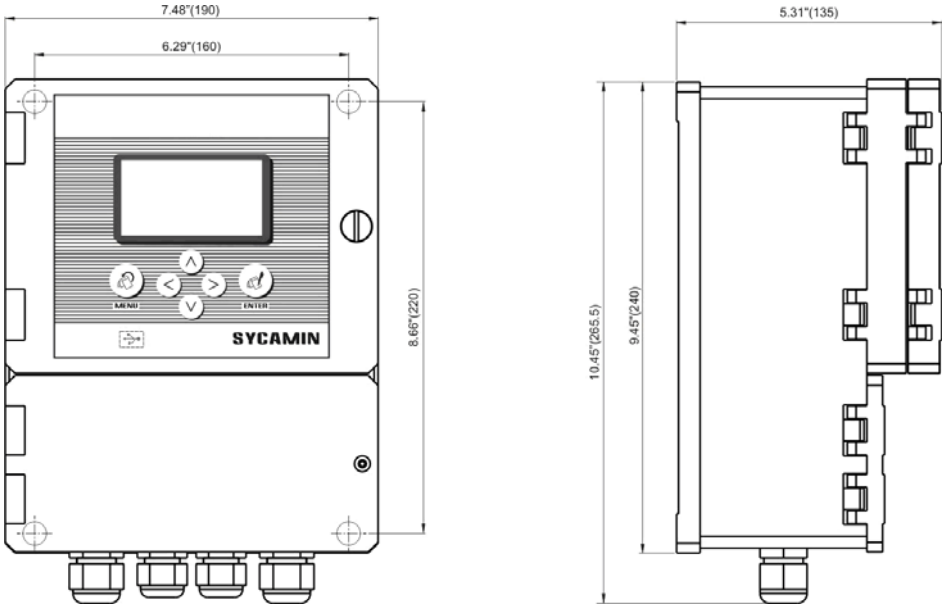

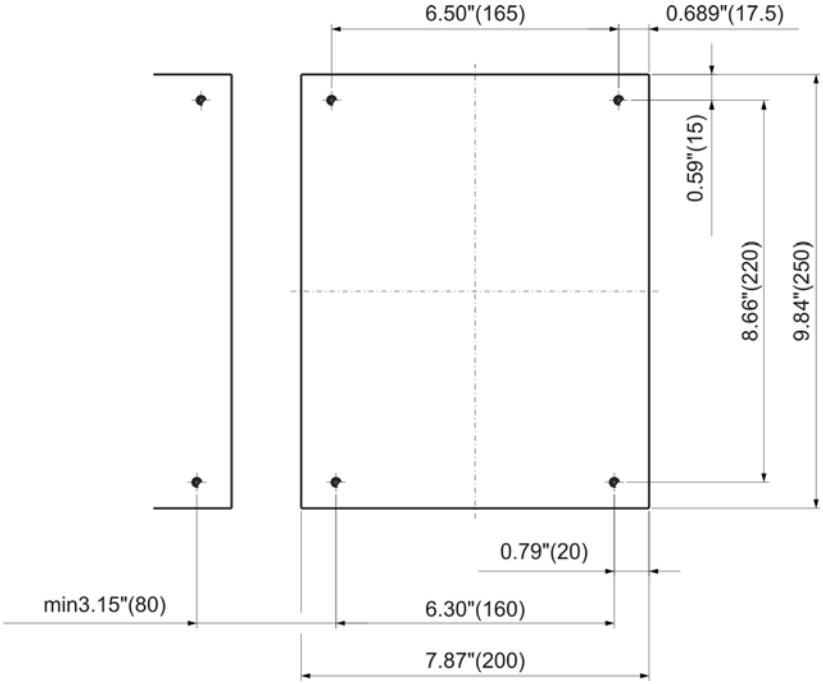

Features description

Inside of the circulating and smooth channel, the greater the water flow, the higher the water level; the more little the flow, the lower the water level. By measuring water level, be available to reversely figure out the flow. The corresponding relation of flow in ordinary channel is influenced by slope ratio of the channel and roughness of the surface. Install weir slot of measuring water in channel, which can generate choking effect to make that there is fixed and corresponding relation between the flow and liquid level in channel. This kind of corresponding relation mainly lies on structure dimension of measuring water weir slot, influence of the channel is reduced to the minimum.

- **Internally install lots of specifiication database of the weirs and slots, such as V shape weir, rectangular weir, round bottom slot, Parshall slot and so on;**
- **For the nonstandard channel structure, user can input flow curve by himself.**
- **Reflection technology of the pulse**
- **Automatic temperature compensation**
- **No need of daily maintenance**
- **Noncontact measurement, which will not be corroded and comtaminated by sewage, can be applied in quite severe environment**
- **RS-232 miniature serial port printer interface, with isolated RS485 data interface**

Principle description

The criterion of ISO 1438 points out computing method of some water slots and weirs. UF53 ultrasonic open channel flowmeter probably uses these methods.

General formula (Kindsvater/Carter)

$$Q = 3600 \times Ce \times 2/3 \times \sqrt{2g} \times b_e \times h_e^{1,5}$$

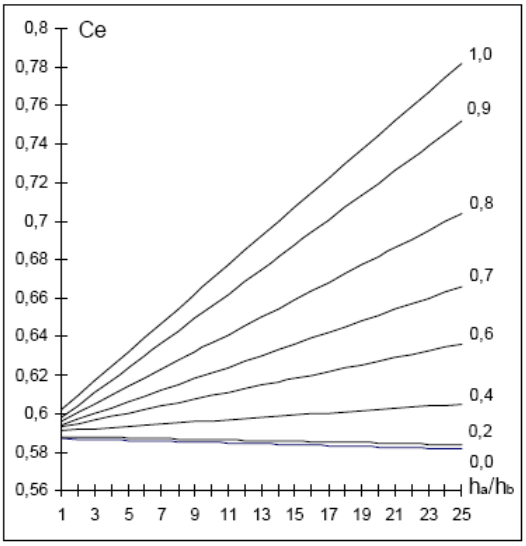

Here: Q =flow [m^3/h]

b =width of the weir [m]

b_e =effective width of the weir [m]

$b_e = b + k_b$

h_a =height [m]

h_e =effective herght [m]

$h_e = h_a + k_b$, k_b = 0,001

h_b =the following depth of the contractible edge [m]

B =width of the water tank [m]

L =to the distance of sensor 4 ~ 5 × $h_{a\ max.}$

g =constant is up to the gravity of earth = 9,81 m/s^2

K_b is correction coefficient of the instrument.

Rectangular right-angle weir

In terms of ISO 1438 criterion

Rectangular right-angle weir provides two kinds of types:

-The opposite has contraction

The width at the opening is smaller than the width of the feeder

-There is no contractive for the opposite

The width at the opening is consistent with the corresponding channel (B = b).

Rectangular right-angle weir with the contractive opposite

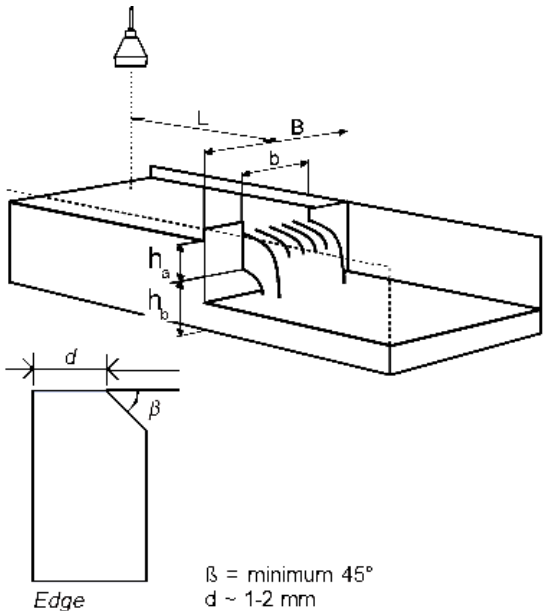

The following is the limit of numerical value of h_a/h_b, h_a,h_b and b

h_a/h_b =max. 2,5

h_a =min. 0,03 m

h_b =min. 0,10 m

b =min. 0, 15 m

(B-b)/2 =min. 0,10 m

The rectangular right-angle weir with the opposite noncontractive

After the weir, the opposite of water tank must be constinuously the max. 0,3 x $h_{a\ max}$

h_a =height

h_b =the depth of the opposite [m]

B =width of the water tank [m]

L =the distance away from sensor

4~ 5 × $h_{a\ max.}$

The following is the limit of numerical value of h_a/h_b, h_a,h_b and b

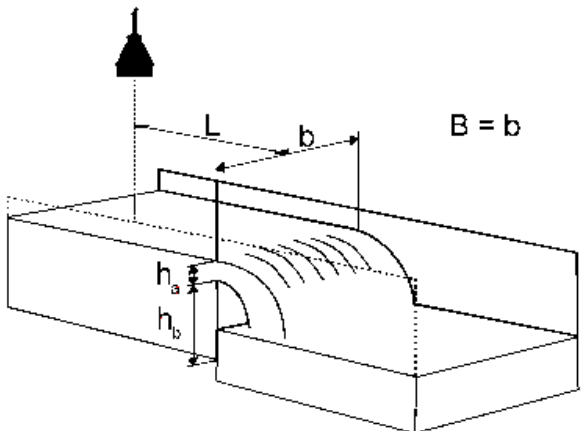

h_a/h_b =max. 1,0

h_a =min. 0,03, max. 0,75 m

h_b =min. 0,10 m

b =min. 0,30 m

Formula: (Rehbock equation)

$$Q = 3600 \times Ce \times 2/3 \times \sqrt{2g} \times b \times h_e^{1,5}$$

Here: Q =flow [m^3/h]

b =width of the weir [m]

Ce= 0,602+0,083 h_a/h_b

h_a =height [m]

h_e =effective height [m]

$h_e = h_a+k_b$, k_b = 0,0012

g =constant is up to the gravity of earth= 9,81 m/s^2

Triangular weir

In terms of ISO 1438 criterion

ß =min. 45°

d = 1-2 mm

h_a =height [m]

h_b =depth under the opposite [m]

B =width of the water tank [m]

L =the distance away from 4 - 5 × $h_{a\ max.}$

The limit of the numerical value

α= 90°

h_a/h_b= max. 0,4

h_a/B =max. 0,2

h_a =min. 0,06 m

h_b =min. 0,09 m

Formula: (Kindsvater-Shen).

$Q = 3600 \times Ce \times 8/15 \times \sqrt{2g} \times tg(\alpha/2) \times he^{2,5}$

Here: Q =flow [m^3/h]

h_a =height [m]

h_e =effective height [m]

$h_e = h_a + k_b$, k_b = 0,001

g =constant is up to the gravity of earth= 9,81 m/s^2

α=aperture angle

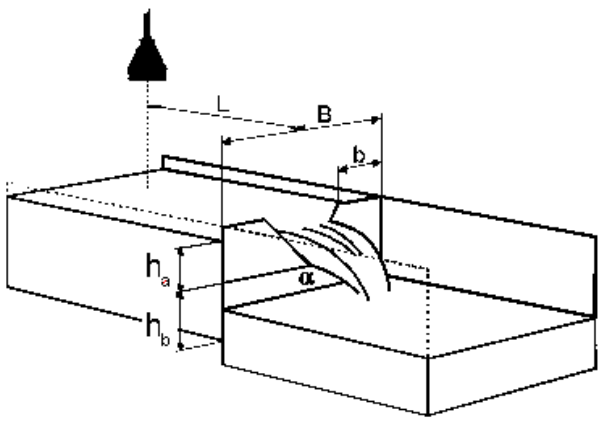

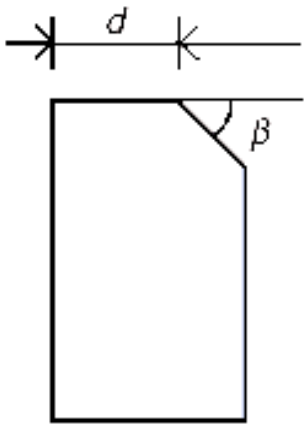

Parshall slot

The parshalll slot is the most common pattern, which is standard Venturi slot.

For free-pouring fluid, you just need to measure horizontal height h_a. The Position of sensor is very important, which must be installed by the data in the diagrammatic sketch and following table column. Ensuring that fluid at the opening of slot is stratosphere (without vortex and horizontal flowing Water flow) is also very important.
For countercurrent measurement of water slot, The opening part of the water slot at least must be widened ten times. The water just needs to flow freely at the port of inlet that is ok. This is the condition when $h_b \leq 0{,}7 \times h_a$.

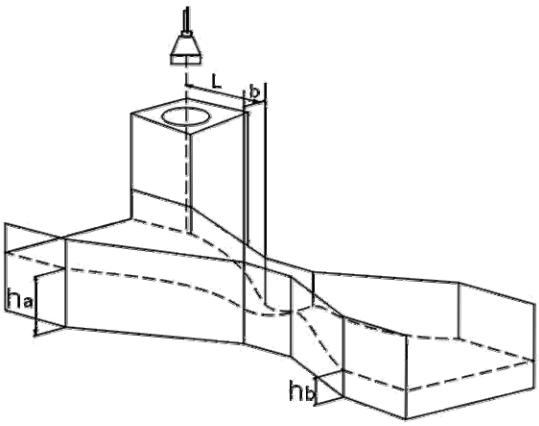

Flow is calculated by the following formula:
$Q = k \times h_a^n$ hvor:
Q =flow [m^3/h]
b = width of the measurement tank [m]
h_a =liquid level in front of the reduced part [m]
h_b =liquid level of the reduced part [m]
L =the distance away from sensor (using the following sheet)

Factor K and index n are all constants (this formula applies to free current and accords with $h_{b\,max} < 0{,}7 \times h_{a\,max}$)

b	k	n	L
1"	217	1,548	0,24
2"	425	1,548	0,27
3"	630	1,548	0,30
6"	1310	1,574	0,41
9"	1851	1,528	0,58
12"	2407	1,519	0,89
24"	5142	1,55	0,99
36"	7863	1,566	1,09

Sheet: determine constants of K, n and the distance away from sensor

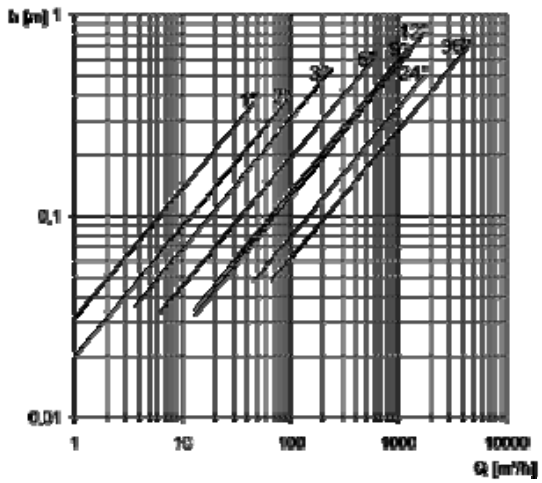

Picture: the Q/h picture of Parshall slot, the height h_a is the function of flow Q.

Installation of sensor

Ultrasonic sensor must be correctly placed by the actual measurement flow. The sensor must be installed on the top of the measured liquid with the correct angle. The following distance makes sure full usage of the function:

Range of measurement	0-3 m
Dead zone	40 cm
The minimum measurement range	50 cm
The maximum measurement range	3 m
The maximum height of sensor	3 m

When installing, need to ensure that the distance between sensor and the highest liquid level is larger than dead zone as well as the axis of sensor should be **perpendicular**; additionally, due to the factor of sensor launching angle, there should be kept enough distance between sensor and wall of pool. When installing sensor, there should not be other reflex surfaces on the path of acoustic sound propagation.

The sensor of ultrasonic open channel flowmeter can be directly installed on the top of water level observation point of measuring water weir and slot. The sounding surface of sensor should be directed at the water surface. Be able to put level ruler on the cover of sensor, through calibrating the upper cover level to make sensor be directed at the sensor.

Installation of Parshall slot

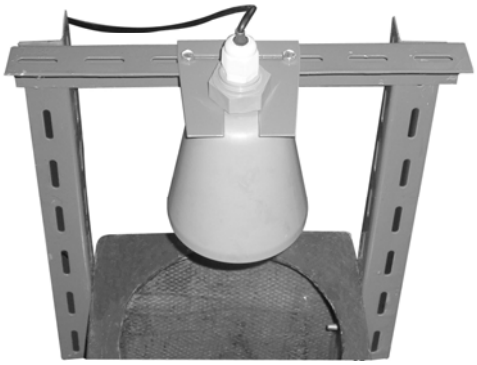

Water level observation point of Parshall slot is at the position away from the 2/3 contracting section of throat

Installation gist

- The probe of ultrasonic open channel flowmeter can be directly installed on the top of weir and slot. Be able to put level ruler on the cover of sensor, through calibrating the upper cover level to make sensor be directed at the sensor. Water level observation point of Parshall slot is at the position away from the 2/3 contracting section of throat;
- Triangle weir and rectangular weir are at the side of upstream, all of which are apart from the weir board that is from three to four times and the maximum is exceeding the depth of weir water;
- When installing probe, pay attention to the dead zone of ultrasonic, namely when the possible highest water level appears, the distance that the probe is apart from water surface is not less than the distance of the dead zone (0.4m).

Installing weir and slot, the following several problems should be paid attention to, otherwise the measurement accuracy is influenced

- The centre line of weir, slot and channel needs to coincide to make there is no bias current appearing when current enters into weir and slot.
- When the weir and slot is access water, the flow state of water needs to be free flow. The level of tail water of triangular weir and rectangular weir needs to be inferior to the weir ridge; the submerging degree of Parshell slot needs to be inferior to the regulated critical submerging degree.
- The upstream of the weir and slot should have straightless section that is greater than five times channel width, all of which makes water current enter into the weir and slot balancedly, namely there is no right and left bias current and no impulsion that forms by channel slop.
- Installation of the weir and slot needs to be fixed on the channel. It needs to be closely connected with side wall of the channel and bottom of the channel, as well as cannot be water leakage, making water current completely pass through the measuring part of the weir and slot. The measuring part of the weir plate is creat of weir and the measuring part of slot is throat section in slot.

Selection of the weir and slot

The maximum flow is less than 10 liters/s, suggesting using right-angle triangular weir; if greater than 40 liters/s, suggesting using Parshell slot; the channel of upsteam is quite short, and the maximum flow is also greater than 40 liters/s, suggesting using rectangular weir.

Advise to use glass reinforced plastic to make weir and slot. The dimension of triangular slot and crest of weir of rectangular weir should be accurate, the surface of the side facing to inflowing water of which should be smooth; the dimension of the throat part of Parshell slot should be accurate, the inner surface of the slot should be smooth.

System performance

Machine model	UF53
Measuring range	0.4~3.0 meters (corresponding liquid level height)
Measurement resolution ratio	Depth: ±1mm
Flow of measuring unit	Litre, cubic meter, gallon, million litre, cubic foot (per second, minute, hour), million litre and million gallon (per day)
Ambient temperature	-20~+60℃
Temperature Compensation	-20~+80℃
Relay	3 pieces of SPDT
Analog output	Two ways of isolated 0~20 mA or 4~20 mA
Communication output	When placing the order od RS232 or RS485, indicating
Communication protocol	MODBUS format
Power requirement	90~130 VAC or 180~260 VAC, 50/60 Hz
Accuracy	±2％of the full measurement range
Chassis protection	NEMA 4X (IP65)
Installation way	Plate-type installation, surface mounting and pipeline type installation
Probe weight	1.6kg
Probe cable	10 feet
Instrument weight	0.5kg
More info	**www.sycamin.de**

Ordering handbook

Complete instruments include	UF53 transmitter, sensor probe, installation parts (selectable)
Transmitter	UF53 transmitter
The sensor probe with different wirecable length	UK4030.10 sensor, with 10 feet (3m) cable UK4030.30 sensor, with 30 feet (100m) cable
Selectable installation parts	3004A0016－001 probe installation parts 3004A0017－002 waterproof cover of probe sunshade
More info	www.sycamin.de