SYCAMIN

MEASURING SYSTEM **SPECIFICATION SHEET**

E53 magnetic induction conductivity, acid-base concentration meter

Magnetic Induction Concentratometer

Brief description

E53 type analyzer can be configured as measuring conductivity or acid-base concentration, accepting various of 3700 series inductive conductivity sensor. Graph dot-matrix liquid crystal display (LCD) supports multilingual display function, whose interface is simple and operation is convenient. Instrument provides two ways of isolated 0/4~20mA electric current output, two ways pulse output and three ways of relay output, RS-232 data interface as well as HART communication capability. It is divided into two kinds of installation way with panel and wall built-up.

Application fields

Extensively being used in the industries of oil refining, power generation, brewing, pharmacy, chemical industry, water treatment, semiconductor fabrication, etc.

System description diagram

System description diagram

Unit: inch (millimeter)

Panel mounting instrument

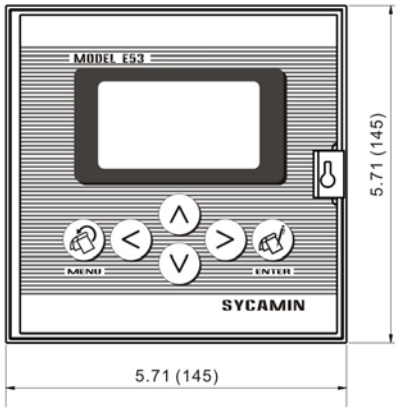

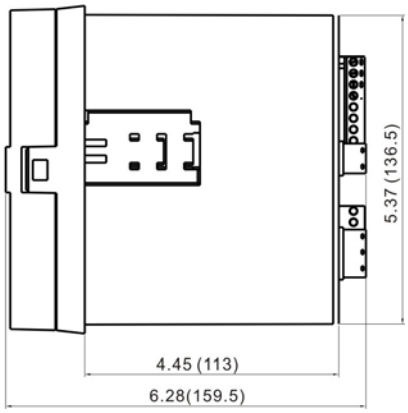

Block watch

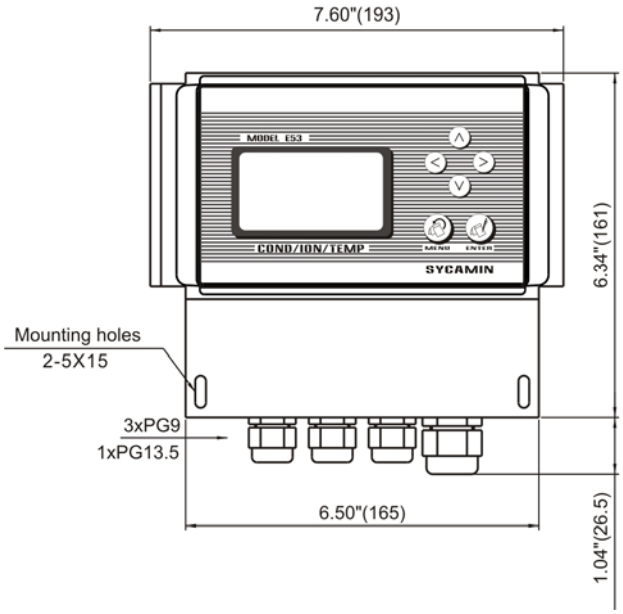

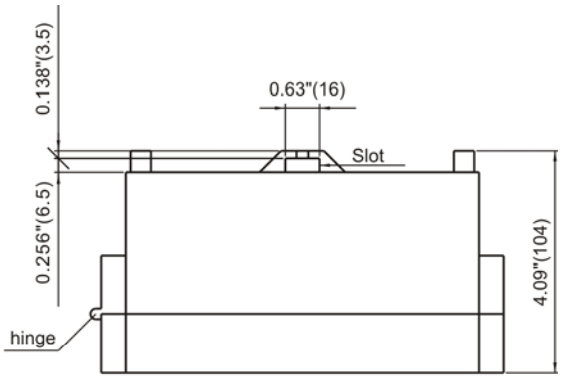

Installation dimension

Installation drawing of wall hanging

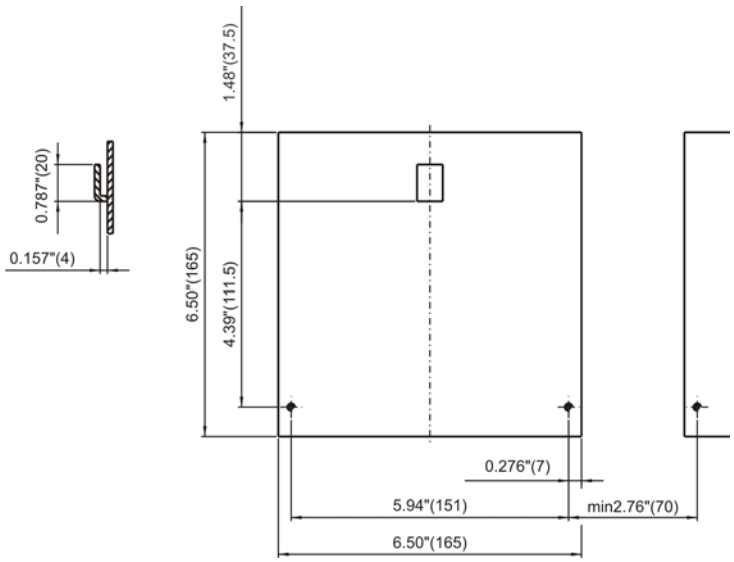

Electrical connection diagram

Panel mounting instrument

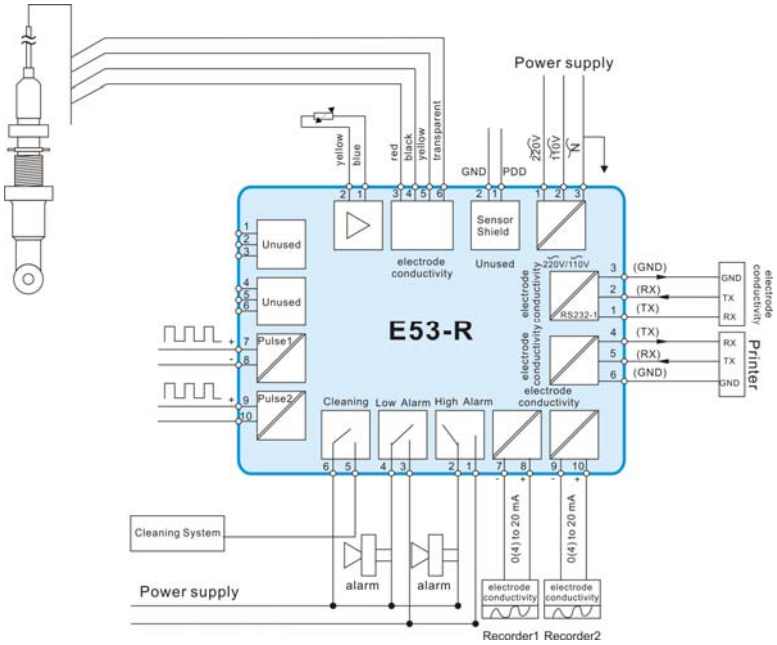

Block watch

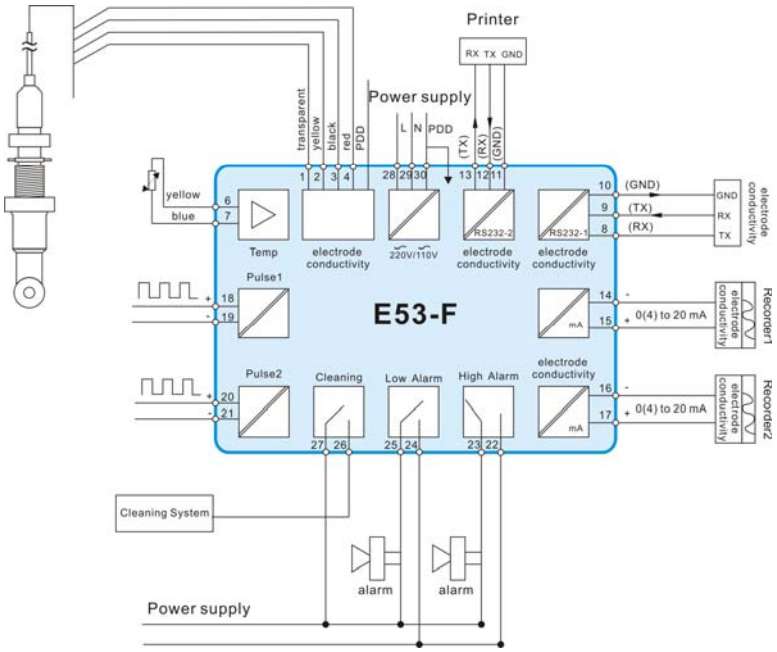

Features description

Diverse measurement	Be selectable to measure conductivity or acid-base concentration. Measured value can be simultaneously displayed on screen with temperature. Alarm state can be simultaneously displayed on one screen. Screen displays date and time.
Backlight oversize LCD reading	Backlight oversize graph dot-matrix liquid display screen, whose resolution is 128×64 pixel and altitude of the main character display is 1/2 inches (13 mm).
Multilingual support function	All the display of display screen can be selected as displaying with English or Chinese.
Multifunction	Various communication mode can be selected; GPRS wireless data transmission (selectable); Spot print (selectable). USB historical data download (selectable);
Menu guide operation	Simple keyfield, reasonable menu structure, this analyzer is easy to be used, whose menu display screen designates user setting, calibration, operation, testing, maintenance function and so on.
Electromagnetic performance	This analyzer is up to the criterion of European EMI and RFI, according with American criterion.
Simple, interactive and diagnostic function	Built-in and diagnostic function continuously tests the operation of the instrument and sensor.
Various calibration methods	Supply various methods to calibrated instrument.
Two paths of analogue output 0/4~20mA	The first analogue output end is designated as main estimated value (conductivity or acid-base concentration); the second analogue output end can select main estimated value (conductivity or acid-base concentration) or measured temperature value.
Password protection	For safety, please use password protection function to restrict instrument's setting and access. Just allow authorized personnel calibrating.

Principle description

Inductive type conductivity sensor generates one induced current in closed circuit in solution, and conductivity of solution can be acquired by measuring magnitude of the electric current. Conductivity analyzer drives primary coil, generating a alternating current in measured medium, this current signal in closed circuit gets through inner diameter hole and ambient medium of sensor. Magnitude of induced current generated by secondary coil is proportional to the conductivity of measured medium.

Technical parameters

Input

Measured variable	Conductivity	Cid-base concentration	Temperature
Range of measurement	0~20.00 mS/cm 0~200.0 mS/cm 0~2000 mS/cm	0~100% (calibration of the laboratory)	14.0~302.0℉ (-10.0~150.0℃)
Resolution	0.01 mS/cm 0.1 mS/cm 1 mS/cm	0. 1%	0.1℃
Temperature compensation	Be available to select NTC10kΩ or Pt1000 RTD Input one temperature to conduct compensation by automation or manual operation set by user himself Setting range: 4.0~230.0℉(-10.0~110.0℃) Measured value selected (conductivity or acid-base concentration) determines which of the following compensation method will be adopted: % slope of per ℃ of linearity, nature list of built-in natural water, temperature list defined by user, or not conducting compensation.		
Distance between sensor and instrument	The maximum length of the cable is one functions of range of measurement and un-linearity of being allowed		
Concentration measurement	NaCl: 0~10% NaOH: 0~10% Unknown solution	HCl: 0~10% H2S04: 0~10%	
Calibration method	Zero clearing calibration Multipoint calibration	When sensor is in air, press key to activate automatic system zero. Input one or multi-reference solution or sample value (obtaining from analysis of laboratory), pressing key to activate calibration.	

Attention

When the measured is acid-base, it is necessary to convert full range of analyzer into conductivity to confirm the longest distance.

Recommend to use the following value:

Technical parameters

Output

Relay output	Three electromechanical relay; SPST (C type). UL level, 10A/5A @120/250 VAC, 5A @ 24 VDC contactor	Be respectively able to be setting as high alarm output, low alarm output as well as temperature alarm or cleaning output.
Electric current output	Two groups of isolated analogue output (#1 and #2), each group of which can set as 0~20mA or 4~20mA Resolution 0.004mA (12digits) Maximum drive load: 550Ω Supply spot output correction	#1 group is designated to represent measuring conductivity/acid-base concentration #2 groups is designated to represent measuring conductivity/acid-base concentration or temperature
Pulse output	Two groups of pulse output	Respectively following two groups of manufacture procedure value of electric current output
Communication way	RS-232	Be able to use IBM compatible personal computer and realize that determinator determines data communication
	HART protocol (selectable)	Use the communication chaining established by appropriate hand-held terminal or data system through HART software to realize configuration and invoking of measured value of multi-determinators
	Needle printer function (selectable);	
Storage backup	All the user settings are saved in EEPROM, and data will not be lost after outage.	
Measured performance	Accuracy	0.5% of the full range
	Stability	Each 24h is 0.2% of the full range (non-accumulation)
	Repeatability	0.1% of the full range
	Temperature drift	Zero and full range: less than 0.02% of the full range per ℃

Mechanical parameter

	Panel mounting type	**Wall built-up type**
Housing	Polycarbonate	Polycarbonate
Protection degree	IP54	IP65
Display	128×64 pixel	128×64 pixel
Net weight	Approx 1.8 pounds (0.8 kg)	Approx 2.2 pounds (1.0 kg)
Dimension (L×W×D)	145×145×147.5mm	194×189×104mm
Hole size	137×137mm	

Technical parameters

Electrical connection

Type	Terminal
Power requirement	90-130 VAC, 50/60 Hz or 190-260 VAC, 50/60 Hz
Power dissipation	Maximum 10VA

Environmental conditions

When operating	-4~140℉ (-20~60℃);	relative humidity 0~95%, no condensation
When depositing	-22~158℉ (-30~70℃);	relative humidity 0~95%, no condensation

More info **www.sycamin.de**