D53 Dissolved Oxygen Analyzer

Polarographic Dissolved Oxygen Analysator

Brief description

D53 type dissolved oxygen analyzer is composed of a wall mounted or panel mounted transmitter and corresponding sensor. Accurately and reliably monitor dissolved oxygen concentration in water. Selectable, on-line and automatic cleaning function strengthens usage performance in specific environment and reduces the maintenance capacity to the minimum. Liquid Crystal Display (LCD) of graphics dot-matrix, supporting multilingual function, whose interface is simple, is convenient to be operated. The instrument provides two paths of independent electric current with 0/4～20mA, two paths of pulse output and three paths of relay output, printer interface of RS-232 miniature serial port, data interface with isolated RS485 as well as selectable HART communication capability.

Field application

Selecting appropriate sensor can be used for monitoring in power station and exits and entrances of deaerization plant; also can be used for monitoring in each craft site of sewage treatment plant. Typical application environment contains adjusting tank, aeration tank, aerobiotic/anaerobic dispelling tank, effluent monitoring and so on. Also it is can be used for detecting of various kinds of water body dissolved oxygen surface water, such as surface water, sewage and so on.

System descriptive graph

Installation dimension

Unit: inch (mm)

Plate-mounted type

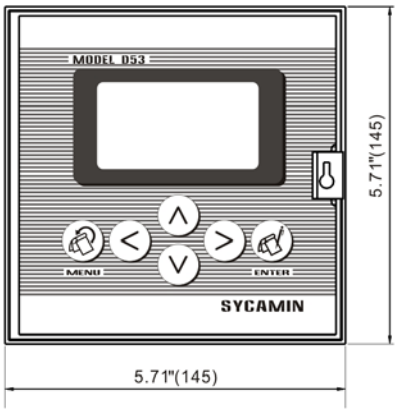

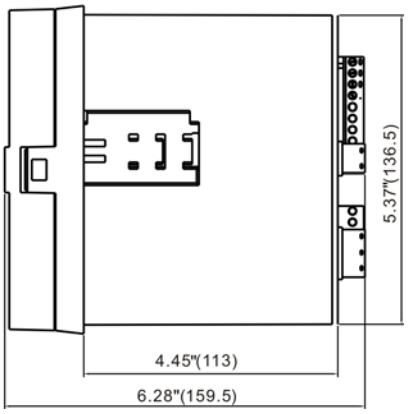

Wall-mounted type

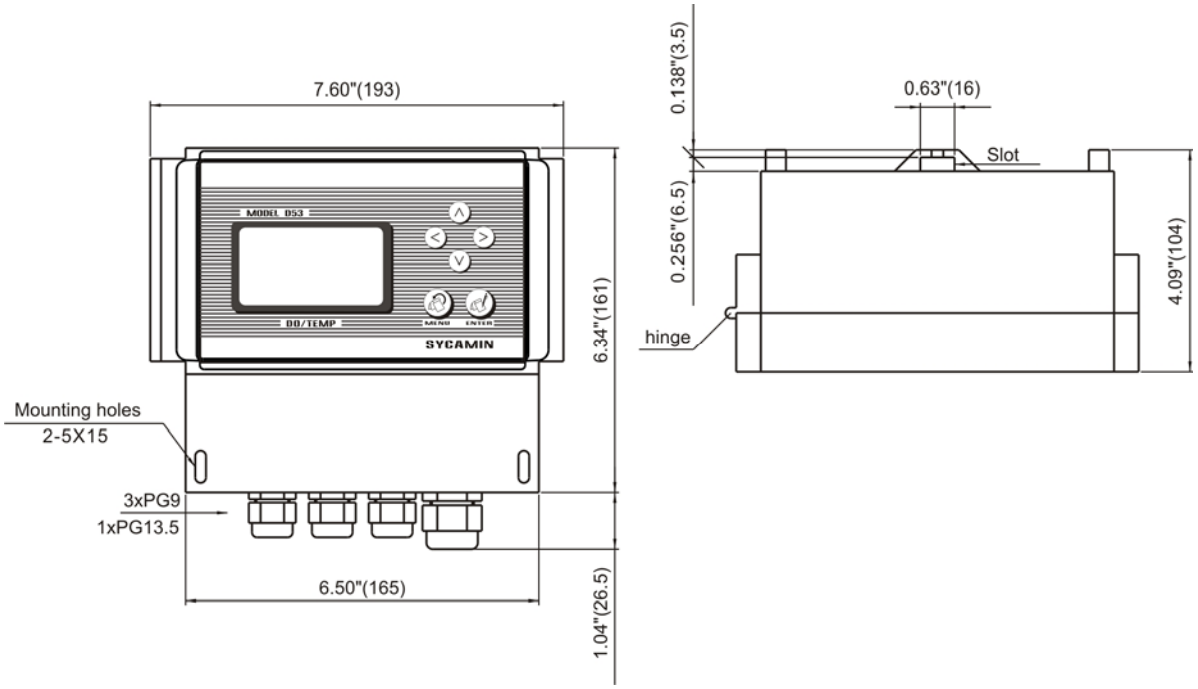

Installation dimension

Wall mounted installation diagram

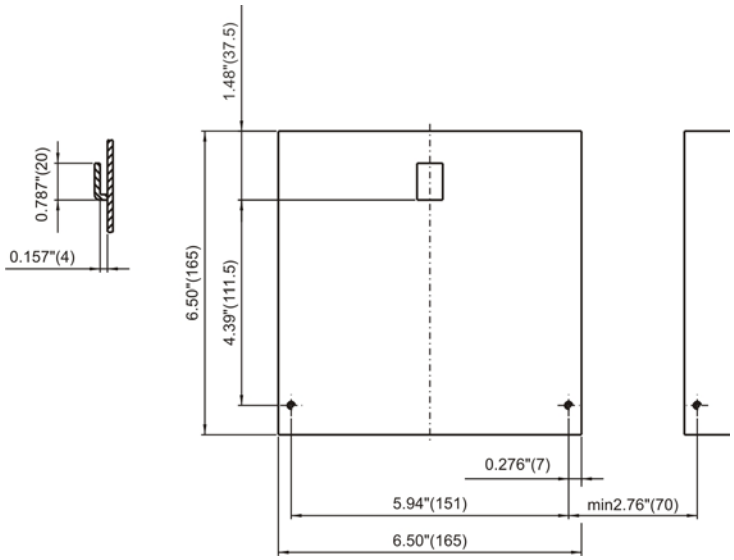

Electrical connection diagram

Plate-mounted instrument

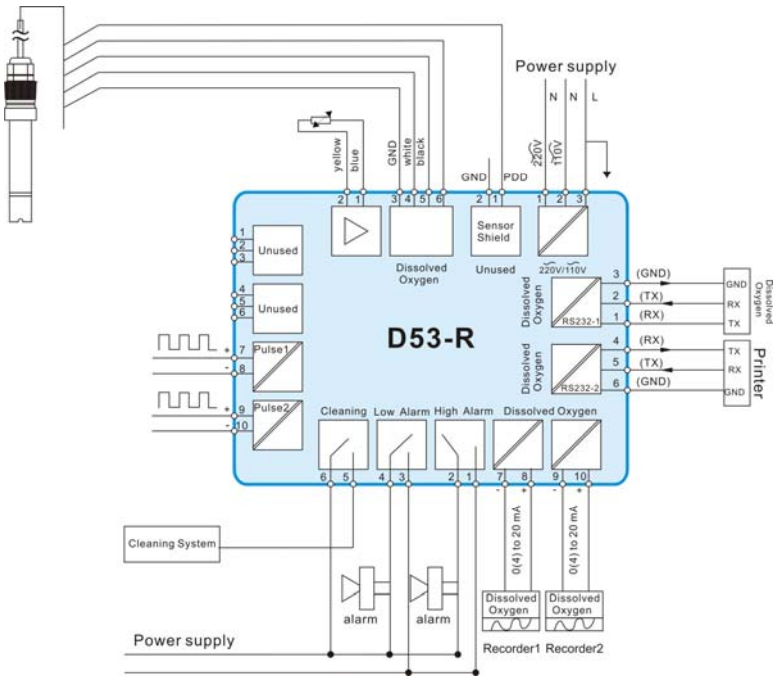

Hanging instrument

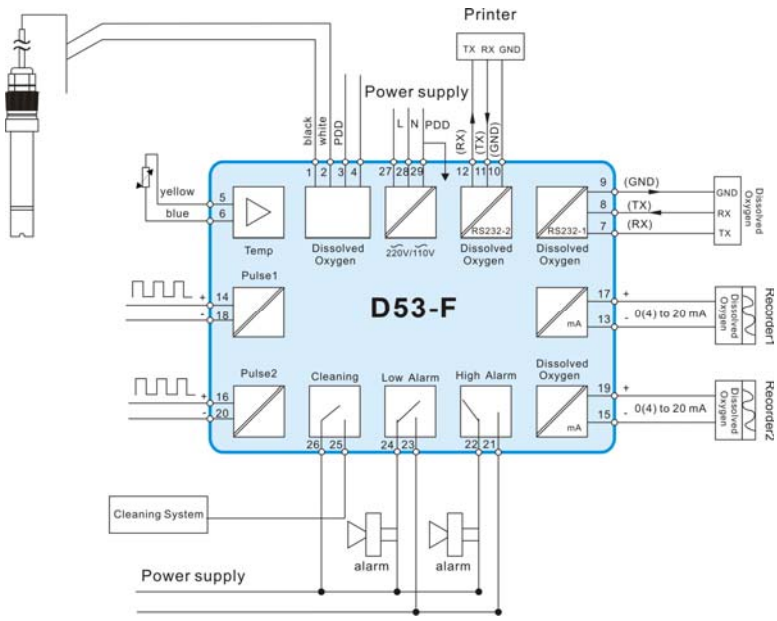

Characteristic description

Diversified measurement	Be independently available to conduct measuring dissolved oxygen (ppm、ppb) or (%). Temperature and alarm status can be simultaneously displayed on one display screen. Display screen displays date and time.
Backlighted and oversized LCD reading	There is the backlighted and oversized graphics dot-matrix Liquid Crystal Display, the resolution of which is 128×64 pixel and the main character of which displays the height that is 1/2 inch (13 mm).
Multilingual support capability	All the display of the display screen can be selected to be displayed by English or Chinese.
Digital communication	The instrument includes isolated RS-485 (using standard MODBUS protocol or factory agreed protocol) This digitization output conveniently and effectively realizes configuration and invocation of testing data for determinator. Be available to access miniature serial port printer (RS-232 interface) Be available to access GPRS wireless data transmission (selectable); USB historical data download (selectable);
Self-cleaning function	There are three relays for instrument configuration, the third of which can control selectable electrode cleaning system of air shock wave.
Menu handbook operation	There are simple keyfield and reasonable menu structure. This analyzer is easy to be used and its menu display screen indicates the function of setting, calibration, operation, testing, maintenance, etc. to you.
Electromagnetic performance	This analyzer reaches to the European criterion of EMI and RFI, conforming with American criterion.
Simple and interactive diagnostic function	Built-in diagnostic function continuously tests the operation of instrument and sensor.
Two paths of analog output 0/4～20mA	The first analog output end is designated as the main measured value (dissolved oxygen); the second analog output end can select the main measured value (dissolved oxygen) or measured temperature value.
Password protection	For safety, please use password protection function to restrict the setting and access of the instrument. Only allow authorized personnel to conduct calibration.

Technical parameters

Mechanical parameter

	Panel-mounted model	Wall-hanged model
Housing	polycarbonate+ABS	polycarbonate+ABS
Level of protection	IP54	IP65
Display	128×64 pixel	128×64 pixel
Net weight	Approx. 1.8 pounds (0.8 kg)	Approx. 2.2 pounds (1.0 kg)
Dimensions (L×W×D)	145×145×147.5mm	194×189×104mm
Hole size	137×137mm	

Electrical connection

Type	Terminal
Power requirement	90-130 VAC, 50/60 Hz or 190-260 VAC, 50/60 Hz
Power consumption	Max. 10VA

Environmental conditions

When operating	-4～140℉ (-20～60℃); relative humidity 0～95%, no condensing
When depositing	-22～158℉ (-30～70℃); relative humidity 0～95%, no condensing
More information	www.sycamin.com.cn

Technical parameters

Input		
Measured variable	Dissolved oxygen	Temperature
Range of measurement	0.00～200.0ug/L 0.00～2000ug/L 0.00～20.00mg/L or 0.00～200% saturation	-4.0～302.0℉ (-20～150.0℃)
resolution	0.1ug/L 1ug/L 0.01mg/L 0.1% saturation	0.1℃
Temperature compensation	Be available to select NTC10kΩ or Pt1000 RTD User automatically or manually inputs one self-set temperature to conduct compensation Setting range: 41.0～122.0℉ (5.0～50.0℃)	
Pressure atmosphere compensation	1 pressure atmosphere (760mm 汞柱)	
Salinity compensation	0.0～40 ppt	
Film coefficient compensation	0.0～4.999%	
The distance between the sensor and instrument	The longest 30 m	
Calibration method	Zero oxygen calibration	Only being used when sensor is calibrated in anaerobic water
	Air calibration	Only being used when sensor is calibrated in air based on the current measured temperature value to automatically do calibration
	Saturation calibration	Only being used when process has been known to be 100 percent saturated by air, based on input pressure atmosphere and sea value, determinator figures out and shows g/L value as well as 100% saturation or temperature and salinity when clear water.

Measuring System

SPECIFICATION SHEET

Technical parameters

Output		
Relay output	3 relay electromechanical relay, SPST(C type), UL level, 10A/5A @120/250 VAC, 5A @ 24 VDC contact	Be available respectively to set as high alarm output, low alarm output and temperature alarm output as well as temperature or washing output.
Functional mode	Control: be able to set as: high/low phase adjustment, fixed point setting, dead zone, open delay and closed delay. Alarm: be able to set as: low alarm point, dead zone of low post alarm point, dead zone of high post alarm point, open delay and closed delay. Status: be available to set as: normally open or closed, when error appears automatically recovering to setting before leaving factory.	
Control function	Relay or current output can be programmable as one or two pulse pumps or electromagnetic valve or electrically driven pump Be able to be programming P, PI, PID or PD control parameter Each relay even can conduct drive by designating through setting parameter Measured value selected by sensor (conductivity, resistivity or salinity or temperature or self-cleaning)	
Current output	Two groups of independent analog output (#1 and #2), each of which can be set as 0～20mA or 4～20mA Resolution: 0.004mA (12digits) Max. Drive load: 550Ω Provide site analog output rectifying	#1 group is designated to represent measuring dissolved oxygen #2 group is designated to represent measuring dissolved oxygen or temperature
Pulse output	Two groups of pulse output	Respectively follow two groups of electric current output's manufacturing procedure value
Communication way	Isolated RS-485	Use Microsoft hyperterminal to download data to PC Modbus or Profibus DP protocol or factory agreed protocol Be available to use IBM compatible PC and realize

		measured data from determinator
	RS-232	Be available to use serial port miniature printer Print historical data (selectable)
	HART protocol (selectable)	By the communication link created by HART software, use the appropriate hand-held terminal or data system to realize configuration and invocation of measured value from multi-determinators
	GPRS transmitter (selectable)	By the communication link created by HART software, use the appropriate hand-held terminal or data system to realize configuration and invocation of measured value from multi-determinators
	USB historical data downloading (selectable)	
Storage backup	All the users setting are stored in EEPROM (EEPROM), after outage, date will not be lost. Storage data 20000 points Be available to externally access USB downloading historical record	
Testing performance	Accuracy: 0.5% of the full scale Stability: each 24h is 0.05% of the full scale (no accumulation) Repeatability: 0.1% of the full scale Temperature drift: zero and the full scale: less than 0.03% of per ℃of the full scale	

Matched information

Sensor and its attachment involve D33 machine type