SYCAMIN

MEASURING SYSTEM **SPECIFICATION SHEET**

MPO_4^{3-} 7220 Phosphatr Analyzer

Brief description

In acid medium, orthophosphoric acid ion (PO_4^{3-}) reacts with molybdate and vanadate, then generating multivariate heteropoly acid complex compound of yellow phosphorus molybdate vanadium. Among measuring range, its shade is in direct proportion to concentration of orthophosphoric acid ion in and sample.

Application fields

This design is used in continuous testing of phosphate concentration. Detecting of orthophosphate concentration of various parts, such as power plant, surface water, industrial process water as well as sewage treatment plant.

System description diagram

System description diagram

Unit: inch (mm)

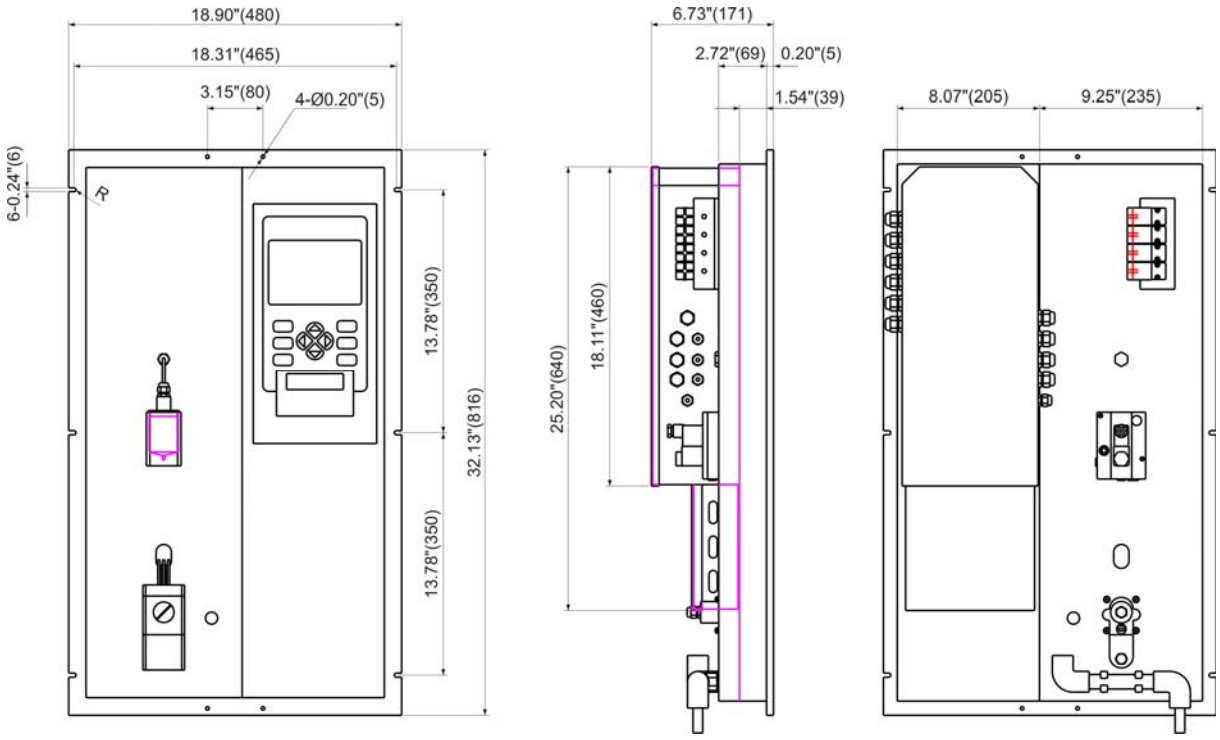

Machine cabinet trepanning dimension: 30.91"(785)×17.72"(450)

SYCAMIN

MEASURING SYSTEM SPECIFICATION SHEET

System description diagram

Operational principle

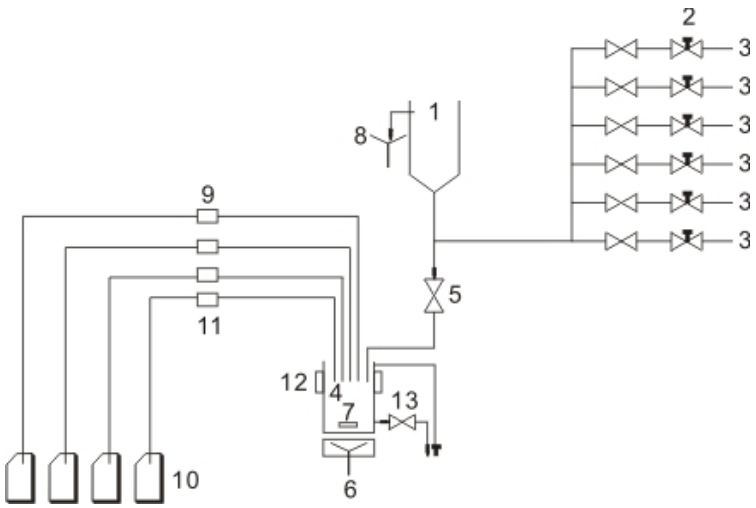

1. Overflowing slot with liquid level detector
2. Flow regulating valve (optional)
3. Input of sample water 1-6
4. Photometer measuring slot
5. Measuring valve
6. Commingler motor
7. Stirrer
8. Overflow port discharge
9. Reagent pump
10. Calibrating liquid container
11. Calibrating pump
12. Photometer
13. Measuring slot discharge

SYCAMIN

MEASURING SYSTEM SPECIFICATION SHEET

Technical parameter

Machine type	**MPO_4^{3-}7220**	**M PO_4^{3-}7220H**
Sample water Number of channels	1~6	
Measuring cycle	＜10 minutes/per channel	
Sample water pressure	0.2~6 bar	
Temperature	20~40 ℃	
Sample water flow	10~20 L/h	
Operating environment Environment temperature	20~40 ℃	
Mains voltage fluctuation	±10%	
Overloading voltage category	2	
Class of pollution	2 (according to CEI664)	
Elevation degree	≤2000 meters	
Relative humidity	10%~80%	
Weight Plate installed type	18 kg	
without container	8 kg	
All the containers		
Analyze measured value	Orthophosphate	
Range of measurement	0 – 2 ppm	0 – 50 ppm
Repeatability	±2% or ±0.02 ppm	±2% or ±0.2 ppm
Limit of detection	0.02 ppm	0.1 ppm
circulation time	Approx. 10 minutes for each channel	
Input/output alarm number	8 pieces	
Alarm function	6 pieces of threshold relay/little sample water/current channel Systematic alarm 3 pieces of contactor 1 piece of alarm relay Power dump: 30 VDC, 0.5 A is maximum	
Logical input	Quantity: 15 pieces Remote elimination Forbid sample water	
Serial input interface	RS232, Modbus communication protocol (selectable), PROFIBUS protocol (selectable)	
Output 4/20 mA	Quantity: 6 pieces 4 – 20 mA/0 – 20 mA programmable current isolation, the maximum load is 550 ohm	

SYCAMIN

MEASURING SYSTEM SPECIFICATION SHEET

Technical parameter

Material quality/ protection of electronic unit	Anti-static PVC or spraying plastics SS304
Plate and other case	Anti-static PVC + heat-resisting organic glass
Enclosure protection of electronic unit	IP65
Tank body protection	IP54
Maintenance and calibration	Use calibrating solution to conduct chemical zero and slope calibration
Maintenance	Need special maintenance. Use one non-corrosive soft cloth to scrub
Reagent consumption	Each kind of reagent is approximately 1 liter per month
Calibrating solution consumption	Approx. 200 milliliter/calibration
Lithium battery of clock protection	3.6 V
Electronic unit display	Use menu to program 6 pieces of sample water concentration· Analyzing state Alarm, warning Concentration of history Historical data of calibration parameter (date, slope and skewing)
Main power source	
Power source	220 VAC, 50 – 60 Hz Automatic switch The maximum consumption: 100 VA
More info	**www.sycamin.de**

Technical parameter

1) Real real-time measurement, three direct links precise valve control, the maximum to decrease lag phenomenon;

2) Superstrong measurement channel, which can randomly add measuring pipeline to economize the primary prime cost, maximally expands to six channels;

3) Unique long-life photometer ensures accuracy and stability of measurement; the enormous measuring range from ppb to ppm;

- Continuously monitor the adding of sample flow and reagent;
- Whether there is air bubble in system or not;
- Temperature of reaction chamber and photometer;
- Photometer pollution;
- Calibration error;
- 30 ℃ thermostatic reaction chamber: the measurement is quick, accurate and stable;

4) Automatic background detection is used for compensating sample water chroma and turbidity; automatic slope calibration and automatic zero calibration are used for compensating silicon background of used reagent;

5) Each minute is high up to 3600 spinning, magnetic stirrers reagent reacts fully;

6) According to water level detection, have eliminated invalid measurement and ensure the maximum reliability of measurement;

7) Precision metering pump (20 μl/times) makes operation convenient and maintenance capacity more small as well as economizes reagent greatly; no need to be manual adjustment, no need to change pump pipe consuming goods;

8) When changing reagent, pulse speed of pump can be accelerated so as to be easy to fill reagent fast and rule out air bubble;

9) Intelligent keypad and remote randomly regulate sample pipeline and on-off output, precise current expanding output, up to independent control output of six channels;

10) Self-contained automatic detection, alarm and protection function: thus guarantee accuracy and reliability of instrument measurement;

11) General reagent, spare part is a few, decrease running cost;

12) Off-line measurement function;

13) Field print function;

14) Inner data storage device can retain ten times calibration and 20000 times measured value;

15) Be available to provide multi-universal type RS232, RS485 serial port and MODBUS protocol, Profibus DP communication;

16) Modem connects with distant computer, computer can download each instrument data by telephone line and control instrument on computer;

17) Remote upgrade function (7216 mainboard).

Connection of sample water

For connection and installation, please use the new pipe

- Wwater inlet: PE pipe 4 × 6 mm
- Outlet: PE pipe 10 × 12 mm
- Material: polytene or teflon
- Pressure: 0.2~6 bar
- Temperature: 20~40 ℃

Installation of container
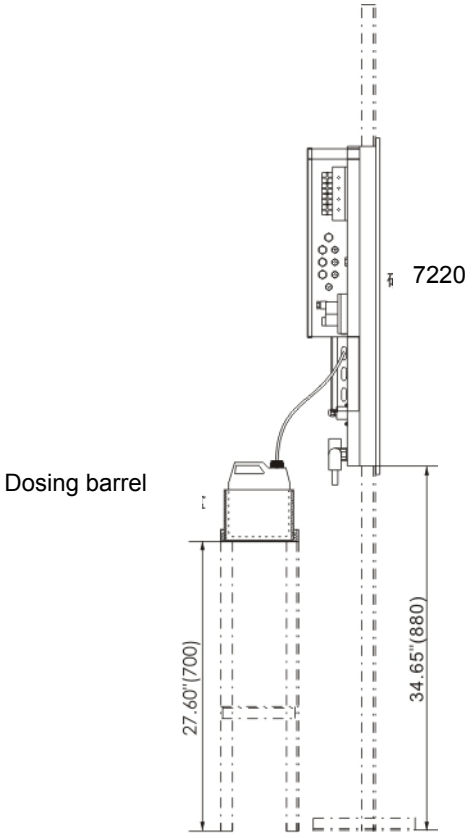
Match a container holder with instrument, its fixed position is displayed in the following figure